JX-FB Bronze Flange Bushing

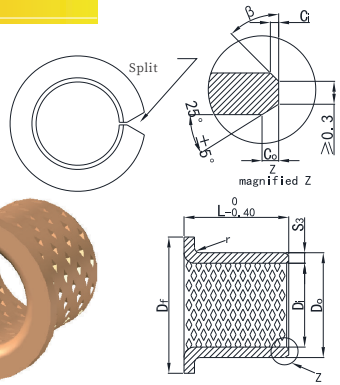

S_3	1.0	1.5	2.0	2.5
r	$1^{-0.5}$	0.5±0.3	0.25±0.2	35°±5°

Size	D_i ΦD	D_o ΦD	Flange Dia D_f	Length L $^{0}_{-0.40}$										
				15	20	25	30	35	40	50	60	70	80	90
JX-FB-F-25	25	28	35	25150	25200	25250								
JX-FB-F-30	30	34	45		30200	30250	30300							
JX-FB-F-35	35	39	50		35200	35250	35300	35350						
JX-FB-F-40	40	44	55			40250	40300	40350	40400					
JX-FB-F-45	45	50	60				45300	45350	45400	45500				
JX-FB-F-50	50	55	65				50300	50350	50400	50500				
JX-FB-F-55	55	60	70				55300	55350	55400	55500				
JX-FB-F-60	60	65	75				60300	60350	60400	60500	60600			
JX-FB-F-65	65	70	80				65300	65350	65400	65500	65600			
JX-FB-F-70	70	75	85					70350	70400	70500	70600	70700		
JX-FB-F-75	75	80	90					75350	75400	75500	75600	75700		
JX-FB-F-80	80	85	100					80350	80400	80500	80600	80700	80800	
JX-FB-F-90	90	95	110							90500	90600	90700	90800	90900
JX-FB-F-100	100	105	120							100500	100600	100700	100800	100900
JX-FB-F-110	110	115	130							11050	110600	110700	110800	110900
JX-FB-F-120	120	125	140							12050	120600	120700	120800	120900
JX-FB-F-130	130	135	155								130600	130700	130800	130900
JX-FB-F-140	140	145	165								140600	140700	140800	140900
JX-FB-F-150	150	155	180								150600	150700	150800	150900
JX-FB-F-160	160	165	190								160600	160700	160800	160900
JX-FB-F-170	170	175	200								170600	170700	170800	170900
JX-FB-F-180	180	185	215								180600	180700	180800	180900
JX-FB-F-190	190	195	225								190600	190700	190800	190900
JX-FB-F-200	200	205	235								200600	200700	200800	200900
JX-FB-F-225	225	230	260								225600	225700	225800	225900
JX-FB-F-250	250	255	290								250600	250700	250800	250900
JX-FB-F-265	265	270	305								265600	265700	265800	265900
JX-FB-F-285	285	290	325								285600	285700	285800	285900
JX-FB-F-300	300	305	340								300600	300700	300800	300900

JX-JDB Embeded Solid Lubeicating Bearings

Product introducion

JX-JDB solid lubricant bearing is a kind of finish machining bearing, which based on high-strength brass, tin bronze, steel and brass alloy, cast iron or Gcr15 steel, drilled proportionally and embedded with SL1(Graphite)or SL4(OTFE+MoS2)solid lube-can't. Due to the high mechanical strength and hardness, JX-JDB bushings are broadly used for heavy-load, low-velocity applications-action.SL4 solid lubricant can be used in water.

http://www.juxinfasteners.com

The use of parameters

Parameters	JX-JDB-1 Embeded Solid Lubricating Bearings	JX-JDB-1 Embeded Solid Lubricating Bearings	JX-JDB-1 Embeded Solid Lubricating Bearings	JX-JDB-1 Embeded Solid Lubricating Bearings	JX-JDB-1 Embeded Solid Lubricating Bearings
		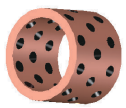	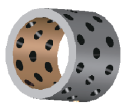		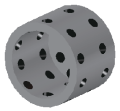
Chemical Compositions	CuZn25Al6Fe3Mn3	CuSn6Zn6Pb3	Steel+CuSn6Zn6Pb3	Ht250	CuZn25Al6Fe3Mn3
Friction coef	<16μ	<15μ	<14μ	<18μ	<17μ
Dilatability	1.6-2.0 10^{-5}/℃	1.6-2.0 10^{-5}/℃	1.6-2.0 10^{-5}/℃	1.7-1.9 10^{-5}/℃	1.6-1.8 10^{-5}/℃
Hardness	210-250HB	80-120HB	60-90HB	180-230HB	HRC55-60
Velocity Max.(dry)	0.4 (m/s)	2 (m/s)	2 (m/s)	0.5 (m/s)	0.1 (m/s)
Velocity Max.(Oil)	5 (m/s)	10 (m/s)	10 (m/s)	5 (m/s)	3 (m/s)
Max PV Value(dry)	1.8N/mm^2-m/s	1.8N/mm^2-m/s	1.8N/mm^2-m/s	1.8N/mm^2-m/s	1.8N/mm^2-m/s
Max PV Value(Oil)	1.8N/mm^2-m/s	1.8N/mm^2-m/s	1.8N/mm^2-m/s	1.8N/mm^2-m/s	1.8N/mm^2-m/s
Temperature Max	300℃	350℃	300℃	400℃	350℃
Applicable conditions	High load Low speed Commonly used	Low load High Temp. Low speed	Low load High Temp. Low speed Cost Saving	High load Low speed	High load Low speed

Solid Lubricant

Lubricant	Features	Typical application
Sl1 Graphit+add	Excellent resistance against chemical attacks and low friction,Temp limit <400℃	Suit for general machines under atmosphere
Sl4+MoS_2 PTFE+MoS_2+CF	Lowest in friction and good of water Lubrication,Temp limit <300℃	Suit for water and seawater lubricanting

JX-JDB Solid Lubricating Bearings

d8:high load
e8: light load
f 7: high percision
Material:CuZn25Al5Mn3Fe3+Graphite

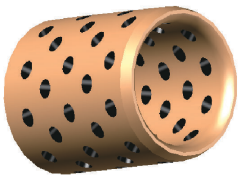

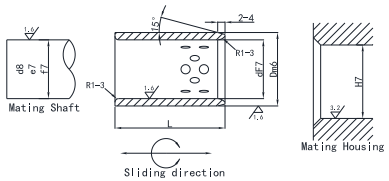

Size	d	Tolerance (F7)	D	Tolerance (m6)	L $^{-0.10}_{-0.30}$																		
					8	10	12	15	20	25	30	35	40	50	60	70	80	90	100	120	140	160	180	200
JX-JDB-8	8	+0.028 +0.013	12	+0.018 +0.007	●	●	●	●																
JX-JDB-10	10		14		●	●	●	●	●															
JX-JDB-12	12	+0.034 +0.016	18		●	●	●	●	●	●														
JX-JDB-14	14		20	+0.021 +0.008		●	●	●	●	●	●													
JX-JDB-16	16		22			●	●	●	●	●	●	●	●											
JX-JDB-20	20	+0.041 +0.020	28				●	●	●	●	●	●	●											
	20		30				●	●	●	●	●	●	●											

http://www.juxinfasteners.com